Electrical Power and Energy Systems 101 (2018) 289–300

Contents lists available at ScienceDirect

Electrical Power and Energy Systems

journal homepage: www.elsevier.com/locate/ijepes

A comprehensive model of C-UPFC with innovative constraint enforcement techniques in load flow analysis

Salah Kamel[a,c,*], Mohamed Ebeed[b], Juan Yu[a], Wenyuan Li[a]

[a] State Key Laboratory of Power Transmission Equipment and System Security and New Technology, Chongqing University, Chongqing, China
[b] Department of Electrical Engineering, Faculty of Engineering, Sohag University, Sohag, Egypt
[c] Electrical Engineering Department, Faculty of Engineering, Aswan University, 81542 Aswan, Egypt

ARTICLE INFO

Keywords:
FACTS
Center-node unified power flow controller
Newton-Raphson
Load flow

ABSTRACT

Center-node Unified Power Flow Controller (C-UPFC) is a recent developed Flexible AC Transmission System (FACTS) device. C-UPFC is a combined shunt-series controller that connected at the midpoint of transmission lines to control various parameters such as, voltage magnitude at midpoint of line, active and reactive powers flow at both ends of line. This paper proposed an efficient modelling with handling operating constraints of C-UPFC device load flow solution. The proposed model based on power injection approach, where the parameters of C-UPFC are represented as function of the specified control values to keep the original structure of Jacobian matrix as it is. The operating constraints of C-UPFC including, the series injected voltages, the series current passing through converters, shunt injected voltage, the injected current of shunt converter, and exchanged power among converters are handled by an developed innovative methods. The developed handling methods based on modifying and updating the specified values as a function of maximum limit of the operating constraints. The proposed C-UPFC model with developed handling operating constraint methods implemented in IEEE 30-bus and IEEE 118-bus test systems. The obtained simulation results show the robustness and feasibility of the proposed model in load flow and superiority of the developed methods over the conventional methods for handling the operating constraints of C-UPFC.

1. Introduction

In recent years, new types of flexible AC transmission systems (FACTS) devices have been developed to increase power system operation flexibility, security, loadability and controllability [1–3]. The center-node unified power flow controller (C-UPFC) is a member of the FACTS family with very attractive features. This device connected at the midpoint of transmission line and can be used to control the voltage magnitude at the mid-point, the active power through the line and the reactive powers at sending and receiving ends of the transmission line. This can be achieved by injecting AC voltages with variable magnitudes and phase angles through three converters combined together via DC link [4,5].

Very few publications are concerned about C-UPFC, however, they can be summarized as follows:

- Ooi et al. [4,5], have proposed the C-UPFC as a new FACTS device which can be used to increase the power transfer capability of a transmission line. This device can be sited at any point in the transmission line. However, it is recommended to be near from the mid-pointt.
- Ajami et al. [6], has presented a transient model of C-UPFC including a control system which response not only the step changing in the active and reactive powers but also is able to exchange the direction of line active power flows.
- Kamel et al. [7], has proposed current injections modelling of C-UPFC to be incorporated in Newton–Raphson based on combined mismatches load flow algorithm.
- However, modelling of FACTS devices in load flow algorithm became an important issue to realise its influences on power system. In general, the implementation of FACTS controllers into an existing load flow algorithms increases the complexity of the programming codes due to the following many reasons: (1) the incorporation of FACTS in power system requires adding new lines and reference buses, (2) the series and/or shunt impedances of FACTS have to be added to the original admittance matrix, (3) the powers contributed by FACTS have to be taken in consideration in the analysis, (4) new codes are required to calculate the Jacobian sub-matrices related to FACTS. Consequently, the basic load flow codes have to be changed.
- Many successful efforts have been produced for modelling the

* Corresponding author at: State Key Laboratory of Power Transmission Equipment and System Security and New Technology, Chongqing University, Chongqing, China.
E-mail addresses: skamel@aswu.edu.eg (S. Kamel), mebeed@eng.sohag.edu.eg (M. Ebeed), dianlixi@cqu.edu.cn (J. Yu), wenyuanli630@gmail.com (W. Li).

https://doi.org/10.1016/j.ijepes.2018.03.034
Received 6 September 2017; Received in revised form 23 February 2018; Accepted 22 March 2018

different types of FACTS in load flow codes without taking into consideration the handling operating constraints of these devices. However, the main contribution in this area can be summarized as follows;

- Simple FACTS modelling based on decoupled approach has been proposed in [8]. This modelling has been applied on unified power flow controller (UPFC) when it used to control the three parameters (voltage magnitude, active and reactive powers flow) simultaneously. This modelling faced the problem of selecting the suitable starting values of the UPFC parameters. Also it faced the problem when the UPFC controller is the only link between two sub-networks.
- Comprehensive FACTS modelling has been developed in [1,2], to solve the limitations of decoupled approach. In this modelling, the size of the Jacobian matrix is increased in order to accommodate the state variables of FACTS devices.
- FACTS modelling based on matrix partitioning approach has been developed in [9]. The main drawback of this modelling is that new codes have to be added.
- Indirect FACTS modelling has been developed in [10–12]. This modelling tried to reduce the complexities of load flow codes. However, the main disadvantage of this approach is that the size of the Jacobian matrix is increased in order to add the state variables of FACTS devices.
- Refs. [13,14], have proposed an elegant modelling for some FACTS based on power and current injection approach. These models have been incorporated in a new load flow method that based on hybrid power and current injection formulation. By using these models, the original structure and symmetry of admittance and Jacobian matrices can be unchanged. The control of voltage, active and reactive power can be done simultaneously or individually. The models solve the problem that happens when the FACTS is the only link between two sub-networks. However, the handling of operating constraints of FACTS parameters has not been addressed yet in this modelling.

Hence, the handling of operating constraints of FACTS must be considered to determine their practical capabilities. Refs. [15–21] have presented some FACTS devices and various methods for handling their violated limits. In these methods, when one of operating constrains is violated, the required specified values of FACTS must be changed precisely to adjust the violated value to its maximum limits for maximizing the utilization of these devices.

This paper presents a developed C-UPFC model that incorporated in Newton-Raphson load flow algorithm with innovative methods for handling its operating constrains violations. The rest of paper is organized as follows: Section 2 describes the operating principals and modelling of C-UPFC controller. Section 3 presents the developed strategies of handling the violated operating constrains of C-UPFC. Section 4 presents the numerical results based on standard IEEE test systems. Finally, the conclusions of paper are presented in Section 5.

2. Modelling of C-UPFC for NR load flow algorithm

C-UPFC is connected at the midpoint of transmission line and consisted of three converters, one of them connected in shunt at the midpoint of transmission line and other two converters connected in series at sending and receiving sides of transmission line. All these converters are connected together via a common DC link as shown in Fig. 1 [4,6].

C-UPFC can be represented by three injected voltage sources (V_s,V_r, V_{sh}) in series with the impedances of coupling transformers as shown in Fig. 2. Three auxiliary buses (*k, j, n*) are added to represent the terminals of C-UPFC and determine the power flow directions. The bus at midpoint (*j*) represented as a PV-type and the other buses (*k, n*) as PQ-type. C-UPFC is included in transmission system where, X/R Ratio is higher in transmission systems thus for simplifying the calculations, the resistances of transmission line and the coupling transformers can be neglected.

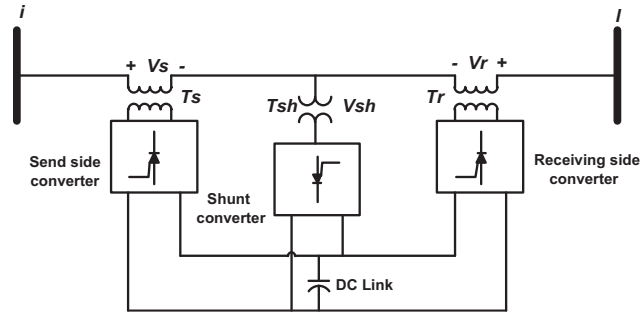

Fig. 1. Schematic diagram of C-UPFC device.

2.1. Series converters modelling

For modelling the series converters, the series voltage sources are converted to current sources (I_s, I_r) in parallel with the transformers reactance according to (1) and (2).

$$I_s = \frac{V_s}{jX_s} \tag{1}$$

$$I_r = \frac{V_r}{jX_r} \tag{2}$$

These currents are injected at buses (*j,k,n*) as shown in Fig. 3. The injected currents depend on the specified voltage magnitude, line active power flow and reactive powers at sending and receiving sides (P^{sp}, Q_s^{sp}, Q_r^{sp}, V_j). By applying Kirchhoff current law's (KCL) at buses (*k*, *n*) of Fig. 3:

KCL at bus k:

$$I_s = I_{kj} - I_{s,k}^{sp} = \frac{V_k - V_j}{jX_s} - \left(\frac{S_{s,k}^{sp}}{V_k}\right)^* \tag{3}$$

where

$$S_{s,k}^{sp} = P^{sp} + jQ_{s,k}^{sp} \tag{4}$$

$$I_{se1} = -I_{s,k}^{sp} = -\left(\frac{S_{s,k}^{sp}}{V_k}\right)^* \tag{5}$$

$$Q_{s,k}^{sp} = Q_s^{sp} + V_i^2\frac{B}{4} - I_{ik}^2\frac{X}{2} + V_k^2\frac{B}{4} \tag{6}$$

KCL at bus n:

$$I_r = I_{r,n}^{sp} - I_{jn} = \left(\frac{S_{r,n}^{sp}}{V_n}\right)^* - \frac{V_j - V_n}{jX_r} \tag{7}$$

where

$$I_{se2} = I_{r,n}^{sp} = \left(\frac{S_{r,n}^{sp}}{V_n}\right)^* \tag{8}$$

$$S_{r,n}^{sp} = P^{sp} + jQ_{r,n}^{sp} \tag{9}$$

$$Q_{r,n}^{sp} = Q_r^{sp} - V_l^2\frac{B}{4} + I_{nl}^2\frac{X}{2} - V_n^2\frac{B}{4} \tag{10}$$

The injected voltages of series converters can be obtained by substituting values of I_s and I_r from (1) and (2) in (3) and (7), respectively.

$$V_s = -\left(\frac{S_{s,k}^{sp}}{V_k}\right)^* \times jX_s + V_k - V_j \tag{11}$$

$$V_r = \left(\frac{S_{r,n}^{sp}}{V_n}\right)^* \times jX_r - V_j + V_n \tag{12}$$

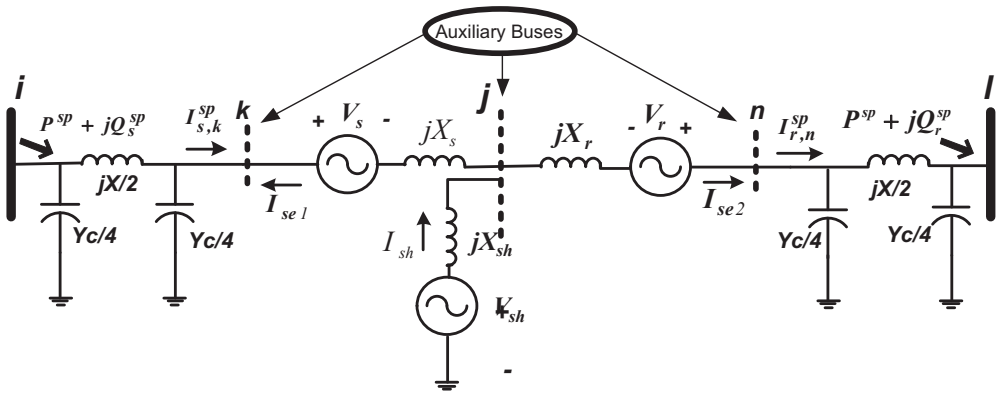

Fig. 2. Voltage sources representation of C-UPFC.

Referring to Fig. 2 the injected active powers of sending and receiving series converters can be found as:

$$P_s^{se} = P_{ex1} = Re(V_s(I_{se1})^*) \tag{13}$$

$$P_r^{se} = P_{ex2} = Re(V_r(I_{se2})^*) \tag{14}$$

The shunt currents can be injected as complex loads at buses (k, j, n) as (Fig. 4):

$$S_k = -V_k \times (I_s)^* \tag{15}$$

$$S_n = -V_n \times (I_r)^* \tag{16}$$

$$S_j = V_j \times (I_s + I_r)^* \tag{17}$$

2.2. Shunt converter modelling

C-UPFC neither absorbs nor injects active power with respect to the AC system. Hence, the net exchanged active power in C-UPFC equals to zero in case of no losses being in converters. However, the auxiliary bus (j) can be represented as a PV type that inject active power (P_{sh}) and reactive power (Q_{sh}) to the system. P_{sh} balances the exchanged powers among the converters. Hence, the shunt injected power can be calculated as:

$$P_{sh} + P_s^{se} + P_r^{se} = 0 \tag{18}$$

$$P_{sh} = P_{ex3} = -P_{ex1} - P_{ex2} \tag{19}$$

The injected complex loads at the auxiliary PV bus (j) can be given as:

$$P_j^{load} = P_j - P_{sh} \text{ and } Q_j^{load} = Q_j$$

where P_j and Q_j are the real and imaginary parts of S_j, respectively. Q_{sh} is used for keeping the magnitude of midpoint voltage at the required value. The injected reactive power can be calculated using the balanced reactive power equation as described (20). The injected voltage and shunt current can be calculated using (21) and (22).

$$Q_{sh} = V_j V_k (G_{kj}\sin\delta_{kj} - B_{kj}\cos\delta_{ij}) + V_j V_n (G_{nj}\sin\delta_{nj} - B_{nj}\cos\delta_{nj}) + Q_j^{load} \tag{20}$$

$$V_{sh} = V_j + jX_{sh}\left(\frac{P_{sh} + jQ_{sh}}{V_j}\right)^* \tag{21}$$

$$I_{sh} = I_{se1} + I_{se2} \tag{22}$$

Fig. 4 shows the overall equivalent circuit of C-UPFC which can be represented by injected fictitious loads (S_k, S_n, P_j^{load}) and generated reactive power (Q_{sh}) at buses (k, j, n). These injected fictitious loads can be added in power mismatch vector of Newton-Raphson load flow code at the mentioned buses with keeping the original Jacobian matrix structure.

3. Handling techniques of C-UPFC operating constraints

The operating constraints of C-UPFC are related to series and shunt converters rating, the C-UPFC constraints can be categorized as:

(1) The series currents constraints passing through the series converters.
(2) The injected series voltages constraints of series converters.
(3) The shunt current constraints of shunt converter.
(4) The injected voltage constraint of shunt converter.
(5) The power exchange among converters.

In general, the main idea of enforcement the operating constraints of C-UPFC based on modifying the required specified values (P^{sp}, Q_s^{sp}, Q_r^{sp}, V_j) to a certain values accommodate with converters rating. For

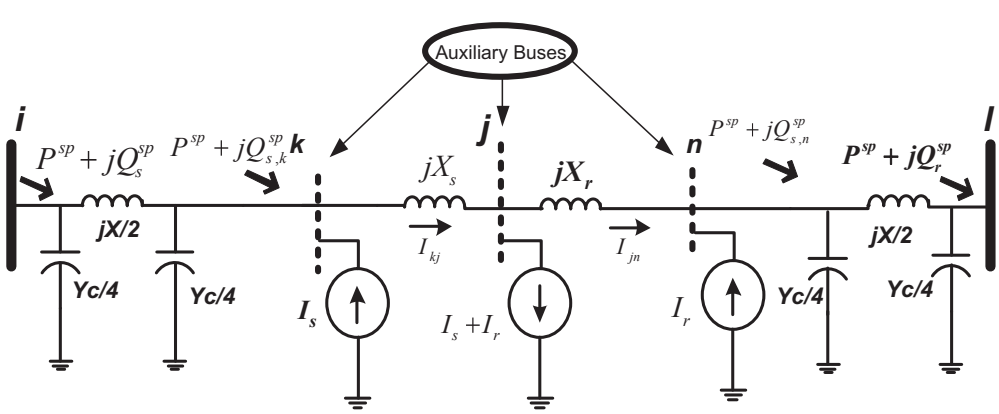

Fig. 3. Representation of series converters based on shunt injected currents.

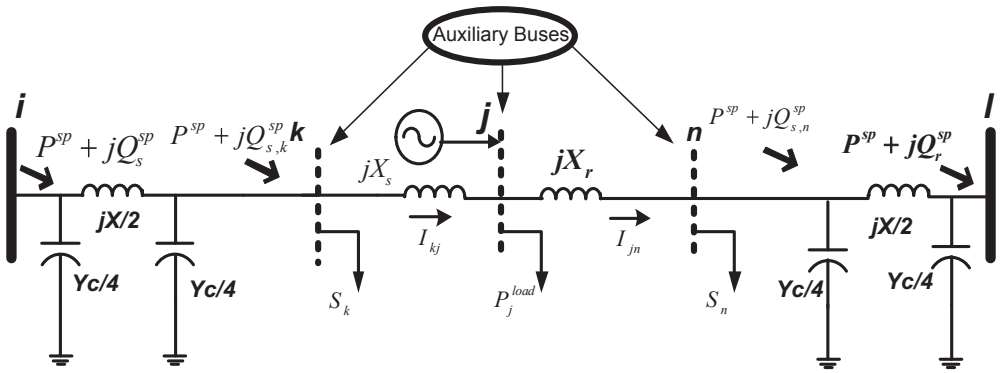

Fig. 4. Representation of C-UPFC based on injected load powers.

maximizing utilizations of C-UPFC, the modified value must capture the maximum operating values according to (23).

$$A - A^{max} = \pm\varepsilon \tag{23}$$

where A is the current operating value, A^{max} is the maximum value of the operating constraints and ε is a small value. The operating constraints are checked after the load flow convergence to find their final values. In case of violations, it can be handled conventionally or by using the innovative method. In conventional method, the specified values are reduced gradually and the load flow is recalculated with the new values then the constraints are rechecked after load flow convergence. However, this process is repeated until (23) is achieved. The innovative method is applied after the load flow convergence, where, the operating constraints are checked and the violated constraints are determined then the load flow is repeated with new specified values. In These specified values are released to be as a function of the maximum limit of constraints in the iterative process of the repeated load flow until the convergence. Hence, the obtained final values of specified values will enforce the constraints at their maximum limits even if the load flow is recalculated. However, the innovative method is more accurate and needs less computation time compared with the conventional method. This due to the saving in times number of load flow solution.

The constraints enforcement of the operating constraints methods are presented as:

3.1. Handling method for violation of currents passing through the series converters

3.1.1. Handling of sending side converter current

The current of send side converter (I_{se1}) is checked firstly to determine whether its value within the limit or not. If I_{se1} is violated, it must be adjusted at the maximum limit (I_{se1}^{max}) according to (23).

Enforcement violation of I_{se1} can be achieved using the following methods:

(1) Conventional method

Referring to (5), enforcement of I_{se1} can be achieved by releasing the specified active power flow in line and/or the reactive powers at sending side as follows:

(a) P^{sp} is reduced gradually until I_{se1} equals to I_{se1}^{max} according to (23) but if I_{se1} is still violated, P^{sp} is kept at zero and Q_s^{sp} is reduced gradually until I_{se1} equals to I_{se1}^{max}.
(b) Q_s^{sp} is reduced gradually until I_{se1} equals to I_{se1}^{max} but if I_{se1} is still violated, Q_s^{sp} is kept at zero and P_{sp} is reduced gradually until I_{se1} equals to I_{se1}^{max}
(2) Developed method

An innovative method can be applied for handling violation of I_{se1} by releasing the specified active power flow or reactive power as a function of maximum limit of current and updated during the iterative process of load flow, the new specified values is deduced using (5) by substituting I_{se1} by I_{se1}^{max} as follows:

$$I_{se1}^{max} = -\left(\frac{S_{s,k,new}^{sp}}{V_k}\right)^* = \frac{-P_{new}^{sp} + jQ_{s,k}^{sp}}{V_k^*} \tag{24}$$

Then,

$$|I_{se1}^{max}| = \frac{\sqrt{((P_{new}^{sp})^2 + (Q_{s,k}^{sp})^2)}}{\sqrt{(V_k^{Re})^2 + (V_k^{Im})^2}} = \frac{\sqrt{((P_{new}^{sp})^2 + (Q_{s,k}^{sp})^2)}}{K_1} \tag{25}$$

where $V_k = V_k^{Re} + jV_k^{Im}$ and $K_1 = \sqrt{(V_k^{Re})^2 + (V_k^{Im})^2}$

Hence, the new specified active power that adjusts the series current at its maximum limit can be given as:

$$P_{new}^{sp} = \sqrt{|I_{se1}^{max}|^2 K_1^2 - (Q_{s,k}^{sp})^2} \tag{26}$$

By the same way the specified reactive power of sending side that adjust the series current at its maximum limit can be obtained as:

$$Q_{s,k,new}^{sp} = \sqrt{|I_{se1}^{max}|^2 K_1^2 - (P^{sp})^2} \tag{27}$$

Then, referring to (6)

$$Q_{s,new}^{sp} = (\sqrt{|I_{se1}^{max}|^2 K_1^2 - (P^{sp})^2}) - V_i^2 \frac{B}{4} + I_{ik}^2 \frac{X}{2} - V_k^2 \frac{B}{4} \tag{28}$$

3.1.2. Handling of receiving side converter current

Enforcement violation of I_{se2} can be handled by the same way of enforcement (I_{se1}) violation. Violation of I_{se2} can be handled by modifying the specified active power flow or reactive power at receiving end according to (23) as:

Enforcement violation of I_{se2} can be achieved using the following methods:

(1) Conventional method

Referring to (8), enforcement of I_{se2} can be achieved by releasing the specified active power flow in line and/or the reactive powers at sending side as follows:

(a) P^{sp} is reduced gradually until I_{se2} equals to I_{se2}^{max} according to (23) but if I_{se2} is still violated, P^{sp} is kept at zero and Q_r^{sp} is reduced gradually until I_{se2} equals to I_{se2}^{max}.
(b) Q_r^{sp} is reduced gradually until I_{se2} equals to I_{se2}^{max} but if I_{se2} is still violated, Q_r^{sp} is kept at zero and P_{sp} is reduced gradually until I_{se2} equals to I_{se2}^{max}
(2) Developed method

The innovative method can be applied for enforce I_{se2} at its maximum limit by releasing the specified active power flow or the specified reactive power at receiving end side from (8) by substituting I_{se2} by I_{se2}^{max} as:

$$I_{se2}^{max} = \left(\frac{S_{r,n,new}^{sp}}{V_n}\right)^* = \frac{P_{new}^{sp} - jQ_{r,n}^{sp}}{V_n^*} \tag{29}$$

$$|I_{se2}^{max}| = \frac{\sqrt{((P_{new}^{sp})^2 + (Q_{r,n}^{sp})^2)}}{\sqrt{(V_n^{Re})^2 + (V_n^{Im})^2}} = \frac{\sqrt{((P_{new}^{sp})^2 + (Q_{r,n}^{sp})^2)}}{K_2} \tag{30}$$

where$V_n = V_n^{Re} + jV_n^{Im}$ and $K_2 = \sqrt{(V_n^{Re})^2 + (V_n^{Im})^2}$

Hence, the new specified active power that adjusts the series current of send side converter at its maximum limit can be given as:

$$P_{new}^{sp} = \sqrt{|I_{se2}^{max}|^2 K_2^2 - (Q_{r,n}^{sp})^2} \tag{31}$$

By the same way the specified reactive power of receiving side that adjust the series current at its maximum limit can be obtained as:

$$Q_{r,n,new}^{sp} = \sqrt{|I_{se2}^{max}|^2 K_2^2 - (P^{sp})^2} \tag{32}$$

Then, referring to (10)

$$Q_{r,new}^{sp} = (\sqrt{|I_{se2}^{max}|^2 K_2^2 - (P^{sp})^2}) + V_l^2 \frac{B}{4} - I_{nl}^2 \frac{X}{2} + V_n^2 \frac{B}{4} \tag{33}$$

3.2. Handling method of injected series voltages constrains of series converters

3.2.1. Handling the injected voltage of sending side converter

If V_s value is violated, it must be adjusted to its maximum limit (V_s^{max}) according to (23). Strategy of enforcement violation of V_s can be achieved conventionally by the same way of enforcement (I_{se1}) violation by reducing the specified active power flow or reactive power at sending side gradually until (23) is achieved. Enforcement violation of V_s can be achieved using the following methods:

Enforcement of V_s can be achieved by releasing the specified active power flow in line and/or the reactive powers at sending side as follows:

(1) Conventional method
   (a) P^{sp} is reduced gradually until V_s equals to V_s^{max} according to (23) but if V_s is still violated, P^{sp} is kept at zero and Q_s^{sp} is reduced gradually until V_s equals to I_{se1}^{max}.
   (b) Q_s^{sp} is reduced gradually until V_s equals to V_s^{max} but if V_s is still violated, Q_s^{sp} is kept at zero and P_{sp} is reduced gradually until V_s equals to V_s^{max}
(2) Developed method

The developed strategy can be applied for handling violation of V_s by releasing the specified active power flow or reactive power at sending side as a function of V_s^{max}. The new released values that enforce V_s to its maximum limit can be deduced from (1) as:

$$V_s = I_s jX_s \tag{34}$$

By substituting I_s from (3) in (34) and let V_s equals to V_s^{max}

$$V_s^{max} = \left(\left(\frac{V_k - V_j}{jX_s}\right) - \left(\frac{S_{s,k}^{sp}}{V_k}\right)^*\right) jX_s \tag{35}$$

By substituting of V_k,V_j,V_s and $S_{s,k}^{sp}$ in (35)

$$V_s^{max} = \frac{(K_1^2 - (V_k^{Re} V_j^{Re} + V_k^{Im} V_j^{Im}) - Q_{s,k}^{sp} X_s) - j((V_k^{Re} V_j^{Im} - V_k^{Im} V_j^{Re} + P^{sp} X_s))}{V_k^*} \tag{36}$$

where $K_1^2 = V_k V_k^*$

$$|V_s^{max}|^2 = \frac{(K_1^2 - (V_k^{Re} V_j^{Re} + V_k^{Im} V_j^{Im}) - Q_{s,k}^{sp} X_s)^2 + ((V_k^{Re} V_j^{Im} - V_k^{Im} V_j^{Re}) + P^{sp} X_s)^2}{|V_k^*|^2} \tag{37}$$

However, (37) can be rewritten in a simple form as:

$$|V_s^{max}|^2 = \frac{(K_1^2 - K_3 - Q_{s,k}^{sp} X_s)^2 + (K_4 + P^{sp} X_s)^2}{|V_k^*|^2} \tag{38}$$

where $K_3 = (V_k^{Re} V_j^{Re} + V_k^{Im} V_j^{Im})$ and $K_4 = (V_k^{Re} V_j^{Im} - V_k^{Im} V_j^{Re})$hence,

$$(P^{sp})^2 (X_s)^2 + 2K_4 X_s P^{sp} + K_4^2 - 2K_5 Q_{s,k}^{sp} X_s + (Q_{s,k}^{sp})^2 (X_s)^2 + K_5^2 - |V_s^{max}|^2 |V_k^*|^2 = 0 \tag{39}$$

where $K_5 = K_1^2 - K_3$

From the previous equation, the new specified active and reactive powers at sending side that adjust the injected voltage of the send side converter can be given as:

$$P_{new}^{sp} = \frac{-B \pm \sqrt{B^2 - 4AC}}{2A} \tag{40}$$

where $A = (X_s)^2$, $B = 2K_4 X_s$ and $C = K_4^2 - 2K_8 Q_{s,k}^{sp} X_s + (Q_{s,k}^{sp})^2 (X_s)^2 + K_5^2 - |V_s^{max}|^2 |V_k^*|^2$

From (39) the new reactive power at sending side is given as:

$$Q_{s,k,new}^{sp} = \frac{-B_1 \pm \sqrt{B_1^2 - 4A_1 C_1}}{2A_1} \tag{41}$$

where $A_1 = (X_s)^2$, $B_1 = -2K_5 X_s$ and $C_1 = K_5^2 + K_4^2 + (P^{sp})^2 (X_s)^2 + 2K_4 X_s P^{sp} - |V_s^{max}|^2 |V_k^*|^2$

Then, referring to (6)

$$Q_{s,new}^{sp} = \left(\frac{-B_1 \pm \sqrt{B_1^2 - 4A_1 C_1}}{2A_1}\right) - V_i^2 \frac{B}{4} + I_{ik}^2 \frac{X}{2} - V_k^2 \frac{B}{4} \tag{42}$$

Based on (40) and (42), two solutions can be obtained for P_{new}^{sp} and two solutions for $Q_{s,new}^{sp}$ to handle the violation of series injected voltage of sending side converter.

3.2.2. Handling the injected voltage of receiving side converter

If V_r value is violated, it must be adjusted to its maximum limit (V_r^{max}) according to (23).

The violation of V_r can be enforced as follows:

(1) Conventional method
   (a) P^{sp} is reduced gradually until V_r equals to V_r^{max} according to (23) but if V_r^{max} is still violated, P^{sp} is kept at zero and Q_r^{sp} is reduced gradually until V_r equals to V_r^{max}.
   (b) Q_r^{sp} is reduced gradually until V_r equals to V_r^{max} but if V_r is still violated, Q_r^{sp} is kept at zero and P_{sp} is reduced gradually until V_r equals to V_r^{max}.
(2) Developed method

The developed method can be applied for handling violation of V_r by releasing the specified active power flow or reactive power at receiving side as a function of V_r^{max}. The new released values that enforce V_r to its maximum limit can be obtained from (2) as:

$$V_r = I_r jX_r \tag{43}$$

By substituting I_r from (7) in (43) and let $V_r = V_r^{max}$

$$V_r^{max} = \left(\left(\frac{S_{r,n}^{sp}}{V_n}\right)^* - \frac{V_j - V_n}{jX_r}\right) jX_r \tag{44}$$

By substituting of V_n, V_j and V_r and doing some manipulations in (44)

$$V_r^{max} = \frac{(-Q_{r,n}^{sp} X_r - K_6 + K_2^2) + j((X_r P^{sp}) + K_7)}{V_n^*} \tag{45}$$

where $K_2^2 = V_n^* V_n$, $K_6 = (V_n^{Re} V_j^{Re} + V_n^{Im} V_j^{Im})$ and $K_7 = (V_n^{Re} V_j^{Im} - V_n^{Im} V_j^{Re})$

$$|V_r^{max}| = \frac{|(-Q_{r,n}^{sp} X_r + K_8) + j((X_r P^{sp}) + K_7)|}{|V_n^*|} \tag{46}$$

where $K_8 = -K_6 + K_2^2$

For simplification, Eq. (46) can be rewritten as:

$$X_r^2 (P^{sp})^2 + 2K_7 X_r P^{sp} + K_7^2 + X_r^2 (Q_{r,n}^{sp})^2 + K_8^2 - 2X_r K_8 Q_{r,n}^{sp} - |V_r^{max}|^2 |V_n^*|^2 = 0 \tag{47}$$

Referring to (47), the new specified active power or reactive power of receiving end side that enforce the injected voltage violation of receiving side converter can be given as:

$$P_{new}^{sp} = \frac{-B_2 \pm \sqrt{B_2^2 - 4A_2 C_2}}{2A_2} \tag{48}$$

where $A_2 = X_r^2$, $B_2 = 2K_7 X_r$ and $C_2 = (Q_{r,n}^{sp})^2 X_r^2 + K_8^2 - 2X_r K_8 Q_{r,n}^{sp} + K_7^2 - |V_r^{max}|^2 |V_n^*|^2$

$$Q_{r,n,new}^{sp} = \frac{-B_3 \pm \sqrt{B_3^2 - 4A_3 C_3}}{2A_3} \tag{49}$$

$A_3 = X_r^2$, $B_3 = -2X_r K_8$ and $C_3 = X_r^2 (P^{sp})^2 + K_8^2 + 2K_7 X_r P^{sp} + K_7^2 - |V_r^{max}|^2 |V_n^*|^2$

Then, referring to (10)

$$Q_{r,new}^{sp} = \left(\frac{-B_3 \pm \sqrt{B_3^2 - 4A_3 C_3}}{2A_3} \right) + V_l^2 \frac{B}{4} - I_{nl}^2 \frac{X}{2} + V_n^2 \frac{B}{4} \tag{50}$$

3.3. Handling method for violation of injected shunt voltage and current

If V_{sh} is violated, it must be adjusted at its maximum value. Violation of the shunt injected voltage can be simply enforced by alleviating the specified voltage at the midpoint until (23) is achieved.

If I_{sh} value is violated, it must be adjusted at its maximum value. In conventional method, I_{sh} is enforced by reducing P^{sp} or Q_s^{sp} or Q_r^{sp} gradually until is achieved.

In developed method, the new specified values that handle I_{sh} violation can be obtained by substituting the value of I_{se1} and I_{se2} from (5) and (8) in (22).

$$I_{sh} = -\left(\frac{S_{s,k}^{sp}}{V_k} \right)^* + \left(\frac{S_{r,n}^{sp}}{V_n} \right)^* \tag{51}$$

Let I_{sh} equals to I_{sh}^{max} with doing some manipulations in (51).

$$|I_{sh}^{max}| = \frac{\left| \begin{array}{c} (-P^{sp} V_n^{Re} + Q_{s,k}^{sp} V_n^{Im}) + (P^{sp} V_k^{Re} - Q_{r,n}^{sp} V_k^{Im}) \\ + j((V_n^{Re} Q_{s,k}^{sp} + V_n^{Im} P^{sp}) + (-V_k^{Re} Q_{r,n}^{sp} - V_k^{Im} P^{sp})) \end{array} \right|}{|V_k^* V_n^*|} \tag{52}$$

$$\begin{aligned} &(Q_{r,n}^{sp})^2 K_1^2 + Q_{r,n}^{sp} (-2Q_{s,k}^{sp} V_n^{Im} V_k^{Im} - 2Q_{s,k}^{sp} V_n^{Re} V_k^{Re}) + (P^{sp})^2 (K_1^2 + K_2^2 - 2V_n^{Re} V_k^{Re} - 2V_n^{Im} V_k^{Im}) \\ &+ (Q_{s,k}^{sp})^2 K_2^2 + P^{sp} (2Q_{s,k}^{sp} V_k^{Re} V_n^{Im} - 2Q_{s,k}^{sp} V_n^{Re} V_k^{Im} + 2Q_{r,n}^{sp} V_n^{Re} V_k^{Im} - 2Q_{r,n}^{sp} V_n^{Im} V_k^{Re}) \\ &- |I_{sh}^{max}|^2 |V_k^* V_n^*|^2 = 0 \end{aligned} \tag{53}$$

The new specified value of active power flow that used to handle the violation of I_{sh} can be captured from (53) as:

$$P_{new}^{sp} = \frac{-B_4 \pm \sqrt{B_4^2 - 4A_4 C_4}}{2A_4} \tag{54}$$

where

$$\begin{aligned} A_4 &= (K_1^2 + K_2^2 - 2V_n^{Re} V_k^{Re} - 2V_n^{Im} V_k^{Im}), \\ B_4 &= (2Q_{s,k}^{sp} V_k^{Re} V_n^{Im} - 2Q_{s,k}^{sp} V_n^{Re} V_k^{Im} + 2Q_{r,n}^{sp} V_n^{Re} V_k^{Im} - 2Q_{r,n}^{sp} V_n^{Im} V_k^{Re}) \text{ and} \\ C_4 &= (Q_{r,n}^{sp})^2 K_1^2 + Q_{sn}^{sp} (-2Q_{s,k}^{sp} V_n^{Im} V_k^{Im} - 2Q_{s,k}^{sp} V_n^{Re} V_k^{Re}) + (Q_{s,k}^{sp})^2 K_2^2 \\ &\quad - |I_{sh}^{max}|^2 |V_k^* V_n^*|^2 \end{aligned}$$

The new specified value of sending side reactive power flow that handle the violation of I_{sh} can be captured from (53) then substituting this value in (6):

$$Q_{snew}^{sp} = \left(\frac{-B_5 \pm \sqrt{B_5^2 - 4A_5 C_5}}{2A_5} \right) - V_i^2 \frac{B}{4} + I_{ik}^2 \frac{X}{2} - V_k^2 \frac{B}{4} \tag{55}$$

where

$$\begin{aligned} A_5 &= k_2^2 \\ B_5 &= -2P^{sp} V_n^{Re} V_k^{Im} - 2Q_{r,n}^{sp} V_k^{Re} V_n^{Re} - 2Q_{r,n}^{sp} V_n^{Im} V_k^{Im} + 2P^{sp} V_k^{Re} V_n^{Im} \text{ and} \\ C_5 &= (P^{sp})^2 (K_1^2 + K_2^2 - 2V_n^{Im} V_k^{Im} - 2V_n^{Re} V_k^{Re}) - 2P^{sp} Q_{r,n}^{sp} V_k^{Re} V_n^{Im} \\ &\quad + 2P^{sp} V_n^{Re} Q_{r,n}^{sp} V_k^{Im} + Q_{r,n}^{sp2} k_1^2 - |I_{sh}^{max}|^2 |V_k^* V_n^*|^2 \end{aligned}$$

The new specified value of receiving side reactive power flow which handles violation of I_{sh} can be captured from (53) then substituting this value in (10):

$$Q_{r,new}^{sp} = \left(\frac{-B_6 \pm \sqrt{B_6^2 - 4A_6 C_6}}{2A_6} \right) + V_l^2 \frac{B}{4} - I_{nl}^2 \frac{X}{2} + V_n^2 \frac{B}{4} \tag{56}$$

where $A_6 = K_1^2$,

$$\begin{aligned} B_6 &= -2P^{sp} V_k^{Re} V_n^{Im} + 2V_n^{Re} P^{sp} V_k^{Im} - 2Q_{s,k}^{sp} V_k^{Re} V_n^{Re} - 2Q_{s,k}^{sp} V_n^{Im} V_k^{Im} \text{ and} \\ C_6 &= (P^{sp})^2 (K_1^2 + K_2^2 - 2V_n^{Im} V_k^{Im} - 2V_n^{Re} V_k^{Re}) - 2Q_{s,k}^{sp} P^{sp} V_n^{Re} V_k^{Im} \\ &\quad + 2Q_{s,k}^{sp} P^{sp} V_k^{Re} V_n^{Im} - |I_{sh}^{max}|^2 |V_k^* V_n^*|^2 \end{aligned}$$

3.4. Handling method for violation of exchanged power among converters

The exchanged power among converters (P_{ex1},P_{ex2},P_{ex3}) must be checked. If the violations occurred, these values must be adjusted to be close to its maximum values according to (23). Conventionally, enforcement violation of P_{ex1} can be achieved by the same way of enforcement (I_{se1}) violation by reducing the specified active power flow or reactive powers at sending side gradually until (23) achieved. P_{ex1} can be enforced by releasing the specified active power flow or reactive power at sending side as a function of P_{ex1}^{max}. Substitute the values of V_s and I_{se1} from (3) and (5) in (13) as:

$$P_{ex1}^{max} = Re\left((I_s j X_s) \left(-\frac{S_{s,k}^{sp}}{V_k} \right) \right) \tag{57}$$

By substituting of I_s from (3) in (58) and substituting of V_k, V_j in (57) and doing some manipulations.

$$P_{ex1}^{max} = Re\left(-P^{sp} - jQ_{s,k}^{sp} + \frac{1}{K_1^2} [(K_3 + jK_4)(P^{sp} + jQ_{s,k}^{sp})] \right) \tag{58}$$

where $K_3 = V_k^{Re} V_j^{Re} + V_k^{Im} V_j^{Im}$, where, $K_1^2 = V_k V_k^*$ and $K_4 = V_k^{Re} V_j^{Im} - V_k^{Im} V_j^{Re}$

$$P_{ex1}^{max} = P^{sp} K_9 - \frac{K_4 Q_{s,k}^{sp}}{K_1^2} \tag{59}$$

where $K_9 = \left(\frac{K_3}{K_1^2} - 1 \right)$hence;

$$P_{new}^{sp} = \frac{1}{K_9} \left(P_{ex1}^{max} + \frac{Q_{s,k}^{sp}}{K_1^2} \right) \tag{60}$$

The new specified value of reactive power at sending side can be obtained by substituting the value of $Q_{s,k}^{sp}$ from (59) in (6)

$$Q_{snew}^{sp} = (K_1^2 (P^{sp} K_9 - P_{ex1}^{max})) - V_i^2 \frac{B}{4} + I_{ik}^2 \frac{X}{2} - V_k^2 \frac{B}{4} \tag{61}$$

The violation of P_{ex2} can be enforced conventionally, by decreasing the specified active power flow or reactive powers at receiving end side gradually until (23) is achieved. A developed method can be applied for handling violation of P_{ex2} by releasing the specified active power flow or

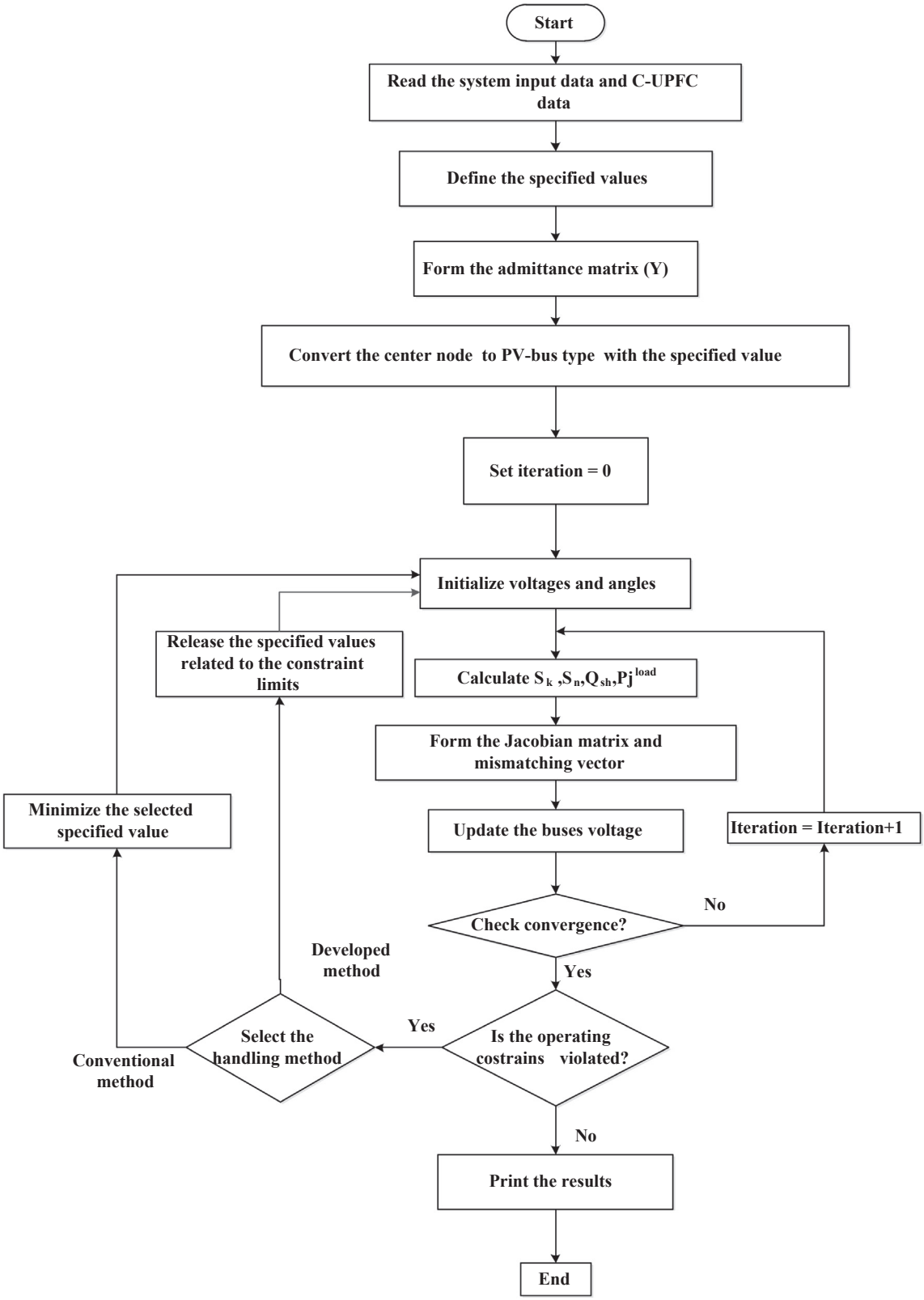

Fig. 5. Load flow solution with the developed C-UPFC model and operating constrains handling.

reactive power at receiving side as a function of P_{ex2}^{max}, the new specified values can be deduced by substituting the values of V_r and I_{se2} from (2) and (8) in (14) as:

$$P_{ex2}^{max} = Re\left(I_r jX_r\left(\frac{S_{r,n}^{sp}}{V_n}\right)\right) \tag{62}$$

By substituting I_r from (7) in (62) and substituting of V_k,V_j and $S_{r,n}^{sp}$ in (64) and doing some manipulations.

$$P_{ex2}^{max} = Re\left(\left(-\frac{1}{K_2^2}((V_n^{Re}V_j^{Re} + V_n^{Im}V_j^{Im}) + j(V_n^{Re}V_j^{Im} - V_n^{Im}V_j^{Re}))(P^{sp} + jQ_{r,n}^{sp}) + (P^{sp} + jQ_{r,n}^{sp})\right)\right) \tag{63}$$

where $K_2^2 = V_n V_n^*$

For simplifying. Eq. (63) can be rewritten as:

$$P_{ex2}^{max} = \left(P^{sp}\left(1 - \frac{K_6}{K_2^2}\right) + \frac{K_7}{K_2^2}Q_{r,n}^{sp}\right) \tag{64}$$

where$K_6 = (V_n^{Re}V_j^{Re} + V_n^{Im}V_j^{Im})$ and $K_7 = (V_n^{Re}V_j^{Im} - V_n^{Im}V_j^{Re})$

$$P_{ex2}^{max} = \left(P^{sp}K_{10} + \frac{K_7}{K_2^2}Q_{r,n}^{sp}\right) \tag{65}$$

where $K_{10} = \left(1 - \frac{K_6}{K_2^2}\right)$

Hence;

$$P_{new}^{sp} = \frac{1}{K_{10}}\left(P_{ex2}^{max} - \frac{K_7}{K_2^2}Q_{r,n}^{sp}\right) \tag{66}$$

$$Q_{r,n,new}^{sp} = \frac{K_2^2}{K_7}(P_{ex2}^{max} - K_{10}P^{sp}) \tag{67}$$

Then referring to (10)

$$Q_{r,new}^{sp} = \left(\frac{K_2^2}{K_7}(P_{ex2}^{max} - K_{10}P^{sp})\right) + V_l^2\frac{B}{4} - I_{nl}^2\frac{X}{2} + V_n^2\frac{B}{4} \tag{68}$$

The violation of P_{ex3} can be enforced by releasing the specified active power flow or reactive power at receiving side or the reactive power at sending side as a function of P_{ex3}^{max} which can be deduced by substituting the values of P_{ex1} and P_{ex2} from (58) and (65) in (19) as:

$$P_{ex3}^{max} = P^{sp}K_{11} + \frac{K_4}{K_1^2}Q_{s,k}^{sp} - \frac{K_7}{K_2^2}Q_{r,n}^{sp} \tag{69}$$

where $K_{11} = (-K_9 - K_{10})$

$$P_{new}^{sp} = \frac{1}{K_{11}}\left(P_{ex3}^{max} - \frac{K_4}{K_1^2}Q_{s,k}^{sp} + \frac{K_7}{K_2^2}Q_{r,n}^{sp}\right) \tag{70}$$

$$Q_{s,k,new}^{sp} = \frac{K_1^2}{K_4}\left(P_{ex3}^{max} - P^{sp}K_{11} + \frac{K_7}{K_2^2}Q_{r,n}^{sp}\right) \tag{71}$$

By substituting value of $Q_{s,k}^{sp}$ from (70) in (6) as:

$$Q_{s,new}^{sp} = \left(\frac{K_1^2}{K_4}\left(P_{ex3}^{max} - P^{sp}K_{11} + \frac{K_7}{K_2^2}Q_{r,n}^{sp}\right)\right) - V_i^2\frac{B}{4} + I_{ik}^2\frac{X}{2} - V_k^2\frac{B}{4} \tag{72}$$

By substituting value of $Q_{r,n}^{sp}$ from (70) in (10) as:

$$Q_{r,new}^{sp} = \left(\frac{K_2^2}{K_7}\left(P^{sp}K_{11} + \frac{K_4}{K_1^2}Q_{s,k}^{sp} - P_{ex3}^{max}\right)\right) + V_l^2\frac{B}{4} - I_{nl}^2\frac{X}{2} + V_n^2\frac{B}{4} \tag{73}$$

Implementation of (40), (42), (48), (49), (54), (55) and (56), two solutions are obtained for enforcement the operating constraints. The closest solution to the original specified is selected as the suitable solution.

Table 1
Strategies of enforcement the operating constrains of C-UPFC.

Violated parameter	Handling methods
I_{se1}	1- (a) Reduce Q_s^{sp} gradually. If I_{se1} still violated use (b). (b) $Q_s^{sp} = 0$ Then reducing P^{sp} gradually. 2- (a) Reduce P^{sp} gradually. If I_{se1} still violated use (b). (b) $P^{sp} = 0$ Then reducing Q_s^{sp} gradually. **3- Modify P^{sp} according to (26) or Q_s^{sp} according to (28).**
I_{se2}	1- (a) Reduce Q_r^{sp} gradually. If I_{se2} still violated use (b) (b) $Q_r^{sp} = 0$ Then reducing P^{sp} gradually. 2- (a) Reduce P^{sp} gradually. If I_{se2} still violated use (b). (b) $P^{sp} = 0$ Then reducing Q_r^{sp} gradually. **3- Modify P^{sp} according to (31) or Q_r^{sp} according to (33).**
V_s	1- (a) Reducing Q_s^{sp} gradually. If V_s still violated use (b) (b) $Q_s^{sp} = 0$ Then reducing P^{sp} gradually. 2- (a) Reducing P^{sp} gradually. If V_s still violated use (b) (b) $P^{sp} = 0$ Then reducing Q_s^{sp} gradually. **3- Modify P^{sp} according to (40) or Q_s^{sp} according to (42).**
V_r	1- (a) Reducing Q_r^{sp} gradually. If V_r still violated use (b) (b) $Q_r^{sp} = 0$ Then reducing P^{sp} gradually. 2- (a) Reducing P^{sp} gradually. If V_s still violated use (b) (b) $P^{sp} = 0$ Then reducing Q_r^{sp} gradually. **3- Modify P^{sp} according to (48) or Q_r^{sp} according to (50).**
V_{sh}	1- Alleviate the specified voltage at the midpoint.
I_{sh}	1- Reduce P^{sp} or Q_s^{sp} or Q_r^{sp} gradually. **2- Modify P^{sp} according to (54) or Q_s^{sp} according to (55) or Q_r^{sp} according to (56).**
P_{ex1}	1- (a) Reduce Q_s^{sp} gradually. If I_{se1} still violated use (b). (b) $Q_s^{sp} = 0$ Then reducing P^{sp} gradually. 2- (a) Reduce P^{sp} gradually. If I_{se1} still violated use (b). (b) $P^{sp} = 0$ Then reducing Q_s^{sp} gradually. **3- Modify P^{sp} according to (60) or Q_s^{sp} according to (61).**
P_{ex2}	1- (a) Reduce Q_r^{sp} gradually. If P_{ex2} still violated use (b) (b) $Q_r^{sp} = 0$ Then reducing P^{sp} gradually. 2- (a) Reduce P^{sp} gradually. If I_{se2} still violated use (b). (b) $P^{sp} = 0$ Then reducing Q_r^{sp} gradually. **3- Modify P^{sp} according to (66) or Q_r^{sp} according to (68).**
P_{ex3}	1- (a) Reduce Q_s^{sp} gradually. If P_{ex3} still violated use (b). (b) $Q_s^{sp} = 0$ Then reducing P^{sp} gradually. 2- (a) Reduce P^{sp} gradually. If P_{ex3} still violated use (b). (b) $P^{sp} = 0$ Then reducing Q_s^{sp} gradually. 3- (a) Reduce Q_r^{sp} gradually. If P_{ex3} still violated use (b) (b) $Q_r^{sp} = 0$ Then reducing P^{sp} gradually **4- Modify P^{sp} according to (70) or Q_s^{sp} according to (72) or Q_r^{sp} according to (73).**

The steps of load flow solution with inclusion of the C-UPFC model and operating constrains determination are given in Fig. 5. Table 1 summarizes the violation handling methods for C-UPFC where the bolded methods refer to the developed methods for constraints enforcement while the others values refer to conventional methods. Finally, a comparison including conventional and the developed methods are presented in Table 2.

4. Simulation results

The proposed modelling of C-UPFC device in load flow moreover, the proposed operating constraints handling methods are validated using standard IEEE 118-bus and 30-bus test systems. Lines, buses and generators data of these systems are given in [22]. For all case studies,

Table 2
Comparisons between the conventional method and the proposed method.

Conventional method	Developed method
• This method based on reducing the specified values gradually and the load flow is recalculated with the new values then the constraints are rechecked after load flow convergence. • It is less accurate compared to developed method where, its accuracy is based on the steps range of the gradual decreasing of the specified values. • It needs more computational time due to repetition of load flow.	• This method based on modifying and updating the specified values as a function of maximum limit of the operating constraints. • It is more accurate where it handles the violated value at its maximum limit precisely. • It needs less computation time compared with the conventional method. This due to the saving in times number of load flow solution.

Table 3
Parameters of C-UPFC for different studied cases (IEEE 118-bus system).

Case→	1	2	3	4
Location	(27–32)	(54–55)	(15–19)	(105–104)
$V^{sp}(p.\ u)$	1.05	1.02	1.00	1.04
$P^{sp}(MW)$	60.00	10.00	−15.00	40.00
$Q_s^{sp}(MVAR)$	30.00	−5.00	20.00	−30.00
$Q_r^{sp}(MVAR)$	30.00	−2.00	10.00	15.00
$V_s(p.\ u)$	0.1613 ∠−127.3°	0.0592 ∠−142.3°	0.0909 ∠158.7°	0.1891 ∠−75.8°
$P_{ex1}(MW)$	4.5622	0.6695	−0.1315	5.9237
$V_r(p.\ u)$	0.1106 ∠129.0°	0.0783 ∠178.3°	0.0520 ∠−96.7°	0.1924 ∠125.5°
$P_{ex2}(MW)$	−5.8071	−0.7190	0.7280	−4.1356
$V_{sh}(p.\ u)$	1.0464 ∠14.7°	1.0213 ∠15.1°	0.9883 ∠10.9°	1.0775 ∠20.5°
$P_{ex3}(MW)$	1.2449	0.0495	−0.5965	−1.7881

the impedance of coupling transformers of C-UPFC are taken equal to j0.1p.u. The convergence tolerance is taken 10^{-5} and system base MVA is 100. The program code was written in MATLAB 2009a and run on a PC with core i5 processor, 2.50 GHz and 4 GB RAM. The case studies are presented as follows:

4.1. IEEE 118-bus test system

4.1.1. Incorporating single C-UPFC controller

The C-UPFC model is incorporated in standard IEEE 118-bus test system. To demonstrate the efficiency of developed model, four studied cases are presented where; C-UPFC is incorporated in different locations with different specified values. The parameter settings of C-UPFC are listed in Table 3 and the studied cases are presented as follows:

Case (1): In this case, C-UPFC is connected in line 27–32. The original power flow in this line is 12.47 MW + j0.51 MVAR and the specified values are selected to be more than the original value.
Case (2): In this case, C-UPFC is connected in line 54–55. The original power flow in this line is 7.07 MW + j1.46 MVAR and C-UPFC is connected to adjust P^{sp} to be more than the original value and Q_s^{sp} and Q_r^{sp} are adjusted to be in opposed direction of the original reactive power flow.
Case (3): In this case, C-UPFC is connected in line 15–19. The original power flow in this line is 10.84 MW-j11.12 MVAR. The C-UPFC is connected to adjust P^{sp},Q_s^{sp} and Q_r^{sp} to be in opposed direction of their original values.
Case (4): In this case, C-UPFC is connected in line 105–104. The original power flow in this line is - 48.64 MW- j2.57 MVAR. The C-UPFC is connected to adjust P^{sp} is to be less and in opposite direction of the original value, Q_s^{sp} is adjusted to be more than original reactive power flow and Q_r^{sp} are adjusted to be in opposed direction of the original reactive power flow.

Referring to Table 3, it can be obvious that the injected voltages and the exchanged powers of the series and shunt converters are varied with variation of the specified values. Table 4 shows the generated shunt reactive power, the voltages at auxiliary buses and the injected loads for all studied cases. It can be obvious that these values are also changed with the changing of specified values. The convergence characteristic of presented model is realized by illustrating the absolute power mismatches of the Newton-Raphson power flow as function of number of iterations for the presented cases as shown in Fig. 6.

Table 4
Shunt reactive power, injected loads and the auxiliary buses voltage for different studied cases (IEEE 118-bus system).

Case	$Q_{sh}(MVAR)$	$V_k(p.\ u)$	$V_n(p.\ u)$	$S_k(MVA)$	$S_n(MVA)$
1	−3.7616	0.956 ∠12.47°	0.976 ∠16.97°	99.584 + j117.794	−99.971 + j 40.660
2	1.278	0.957 ∠15.08°	0.951 ∠15.28°	10.858 + j26.160	−10.857 + j 35.640
3	−11.6833	0.966 ∠12.02°	0.965 ∠9.87°	−24.070 + j36.721	24.053 + j7.198
4	39.0129	0.971 ∠14.73°	0.974 ∠26.57°	91.782 + j0.853	−92.570 + j14.548

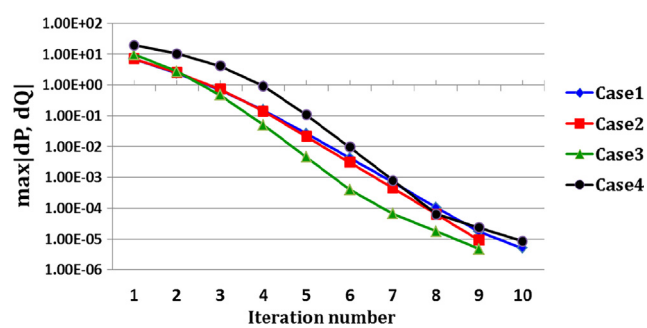

Fig. 6. Convergence characteristic of 118-bus test system studied cases.

4.1.2. Incorporating two C-UPFC controllers

In this section two C-UPFC controllers are incorporated in IEEE 118-bus systems to verify the validity and efficiency of the proposed model. The first C-UPFC is incorporated at line 54–55 where the original line flow without inclusion controllers is 7.069 MW + j1.458 MVAR while the second C-UPFC is incorporated at line 89–92 where the original line flow without inclusion controllers is 63.606 MW - j6.938 MVAR. The parameters of the controllers are listed in Table 5. The generated shunt reactive powers, the voltages at auxiliary buses and the injected loads with inclusion of two C-UPFC controllers are depicted in Table 6. The convergence characteristic for this case is depicted in Fig. 7.

4.2. IEEE 30-bus test system

In this section the proposed methods for handling the operating constraints violation of C-UPFC device are applied and validated. C-UPFC is incorporated in IEEE 30-bus test system at the midpoint of transmission line between buses (8–6). The original power flow without C-UPFC in the mentioned line is −29.43 + j3.20 MVA. The specified

Table 5
Parameters of C-UPFC controllers (IEEE 118-bus system).

Parameter	Sending side converter		Receiving side converter		Shunt converter	
	V_s (p.u)	P_{ex1} (MW)	V_r (p.u)	P_{ex2} (MW)	V_{sh} (p.u)	P_{ex3} (MW)
Frist C-UPFC	0.0742 ∠−155.4°	0.6921	0.0632 ∠−175.9°	−0.7030	1.0181∠15.1°	0.0109
Second C-UPFC	0.0506 ∠69.3°	−3.2481	0.0298 ∠13.2°	2.0713	1.0707∠ 36.4°	1.1768

values are taken to be 1.02 p.u, 45 MW, 30 MVAR and 35 MVAR for the voltage of the midpoint, power flow through the transmission line, reactive power at the sending side and reactive power at the receiving side, respectively. In this section, the conventional and proposed methods for handling the violated operation constraints of C-UPFC model are presented. All numerical results of studied cases are illustrated in Table 7 where, the bold values highlight the enforced values and the modified specified values. The selected value of ε in (23) is taken to be 10^{-3}. The studied cases presented as follows:

Case (1): In this case, C-UPFC is connected in line No. 10 between buses 8–6 and there is no constraints enforcement applied for C-UPFC device.
Case (2): It is similar to case (1), except that I_{se1}^{max} is limited to be 0.4800 p.u. I_{se1}^{max} is enforced conventionally by reducing the specified active power flow gradually. I_{se1}^{max} is enforced conventionally by reducing the specified active power flow gradually with 0.05 MW per step until (23) is achieved. The required computation time for handling the series current violation conventionally for this case equals to 4.89 s.
Case (3): It is similar to case (2), except that I_{se1}^{max} is enforced using the developed methods by releasing the specified active power according to (26). The modified active power that handles the violation of series current equals 35.873 MW. The required computational time for this case is reduced to 0.3065 s. Hence, I_{se1}^{max} is enforced more accurately at the required value using the proposed method and need less computational time compared to conventional method (case 2) as illustrated in Table 7.
Case (4): It is similar to case (1), except that I_{se2}^{max} is enforced conventionally by reducing the specified reactive power flow of receiving side gradually with 0.01 MVAR per step until (23) is achieved where Q_r^{sp} is reduced to 16.100 MVAR. The required computation time for handling the series current violation in this case equals to 4.909 s.
Case (5): It is similar to case (4), except that I_{se2}^{max} is enforced using the proposed method by releasing the specified reactive power flow of receiving side power according to (33). The modified reactive power flow of receiving side power that handles the violation of series current of sending side converter equals 16.1719 MVAR. The required computation time for this case is reduced to 0.3534 s. Hence, I_{se2}^{max} is enforced more accurately at the required value using the proposed method and need less computation time compared to conventional method (case 4) as illustrated in Table 7.
Case (6): It is similar to case (1), except that V_s^{max} is limited to be 0.1750 p.u. V_s^{max} is enforced conventionally by reducing the specified active power flow gradually. V_s^{max} is enforced conventionally by reducing the specified active power flow gradually with 0.05 MW per step until (23) is achieved. The required computational time for handling violation of this value conventionally equals to 2.1809 s.
Case (7): It is similar to case (6), except that V_s^{max} is enforced using the proposed method by releasing the specified active power according to (40). The modified active power that handles the violation of V_s equals 39.822 MW. The required computational time for this case is reduced to 0.3065 s. Hence, V_s^{max} is enforced more accurately at the required value using the proposed method and need less computational time compared to conventional method (case 6) as illustrated in Table 7.
Case (8): It is similar to case (1), except that V_r^{max} is limited to be 0.1500p.u. V_r^{max} is enforced conventionally by reducing the specified active power flow gradually. V_r^{max} is enforced by reducing the specified active power flow gradually with 0.05 MW per step until (23) is achieved where the specified active power is reduced to 37.60 MW.The required computation time for handling the V_r violation in this case equals to 4.1464 s.
Case (9): It is similar to case (8). V_r^{max} is enforced using the proposed method by releasing the specified active power according to (48). The modified active power that handles the violation of V_r equals to 37.968 MW. The required computation time for this case equals to 0.1356 s. Hence, V_r^{max} is enforced more accurately at the required value using the proposed method and need less computation time compared to conventional method (case 8) as illustrated in Table 7.
Case (10): It is similar to case (1), except that P_{ex1}^{max} is limited to be 1 MW. P_{ex1}^{max} is enforced conventionally by reducing the specified reactive power flow of receiving side gradually.P_{ex1}^{max} is enforced by

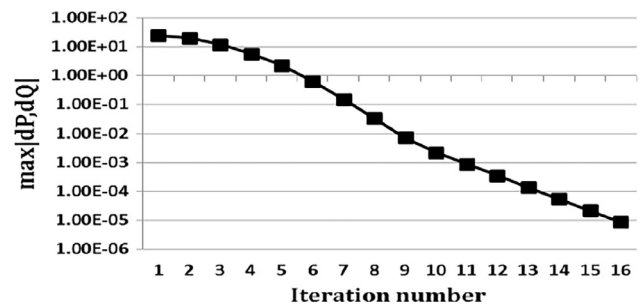

Fig. 7. Convergence characteristic with inclusion two C-UPFC controllers.

Table 6
Shunt reactive power, injected loads and the auxiliary buses voltage with incorporating double C-UPFC controllers.

	P^{sp} (MW)	Q_s^{sp} (MVAR)	Q_r^{sp} (MVAR)	V^{sp} (p.u)	$Q_{sh}(MVAR)$	$V_k(p.u)$	$V_n(p.u)$	$S_k(MVA)$	$S_n(MVA)$
Frist C-UPFC	70	−15	20	1.03	−1.9020	0.953 ∠15.0°	0.954 ∠15.2°	11.71 + j69.73	−11.71 + j59.10
Second C-UPFC	10	5	5	1.02	41.9561	1.058 ∠41.3°	1.038 ∠32.0°	−25.17 −j47.27	9.9503 − j29.26

Table 7
Studied cases of C-UPFC for handling violation of constraints (IEEE 30-bus test system).

Case→	(1)	(2)	(3)	(4)	(5)	(6)	(7)	(8)	(9)	(10)	(11)
$P^{sp}(MW)$	45.00	**35.850**	**35.873**	45.00	45.00	**39.7500**	**39.822**	**37.600**	**37.968**	45.00	45.00
$Q_s^{sp}(MVAR)$	30.00	30.00	30.00	30.00	30.00	30.00	30.00	30.00	30.00	**21.700**	**21.7445**
$Q_r^{sp}(MVAR)$	35.00	35.00	35.00	**16.100**	**16.1719**	35.00	35.00	35.00	35.00	35.00	35.00
$V^{sp}(p.u)$	1.02	1.02	1.02	1.02	1.02	1.02	1.02	1.02	1.02	1.02	1.02
$\lvert I_{se1}\rvert(p.u)$	0.5600	**0.4798**	**0.4800**	0.5657	0.5657	0.5160	0.5166	0.4936	0.5016	0.5117	0.5119
$V_s(p.u)$	0.1878 $\angle-140.0°$	0.1600 $\angle-139.6°$	0.1601 $\angle-139.6°$	0.1948 $\angle-142.5°$	0.1948 $\angle-142.5°$	**0.1749** $\angle-141.4°$	**0.1750** $\angle-141.4°$	0.1643 $\angle-139.1°$	0.1705 $\angle-142.0°$	0.1789 $\angle-134.2°$	0.1789 $\angle-134.2°$
$\lvert I_{se2}\rvert(p.u)$	0.5546	0.4861	0.4863	**0.4698**	**0.4700**	0.5149	0.5154	0.4985	0.5019	0.5539	0.5539
$V_r(p.u)$	0.1685 $\angle-61.2°$	0.1454 $\angle58.49°$	0.1455 $\angle-2.89°$	0.1645 $\angle71.8°$	0.1645 $\angle71.7°$	0.1546 $\angle59.9°$	0.1549 $\angle60.0°$	**0.1499** $\angle60.0°$	**0.1500** $\angle59.5°$	0.1693 $\angle60.7°$	0.1693 $\angle60.8°$
$\lvert I_{sh}\rvert(p.u)$	0.0875	0.0614	0.0614	0.2636	0.2629	0.0715	0.0717	0.0657	0.0666	0.0435	0.0434
$V_{sh}(p.u)$	1.0126 $\angle-17.6°$	1.0159 $\angle-16.8°$	1.0159 $\angle-16.8°$	0.9938 $\angle-17.7°$	0.993 $\angle-17.7°$	1.0144 $\angle-17.1°$	1.0144 $\angle-17.1°$	1.0154 $\angle-17.0°$	1.0150 $\angle-17.0°$	1.0213 $\angle-17.7°$	1.0213 $\angle-17.7°$
$P_{ex1}(MW)$	−1.5180	−1.7638	−1.7637	−1.1420	−1.1418	−1.4539	−1.4524	−1.7962	−1.4336	**−0.9954**	**−1.0000**
$P_{ex2}(MW)$	−3.2725	−2.8944	−2.8957	−1.6918	−1.6981	−3.0784	−3.0831	−2.9585	−3.0126	−3.2213	−3.2219
$P_{ex3}(MW)$	4.7905	4.6582	4.6594	2.8337	2.8400	4.5323	4.5355	4.7546	4.4461	4.2167	4.2219
Time (sec.)	0.0973	4.8935	0.3065	4.909	0.3534	2.1809	0.1207	4.1464	0.1356	2.9979	0.3744

Table 8
Simulation time and number of iterations of power flow solution with C-UPFC (IEEE 30-bus system).

	Base case	I_{se1} Enforcement		I_{se2} Enforcement		V_s Enforcement		V_r Enforcement		P_{ex1} Enforcement	
Case→	(1)	(2)	(3)	(4)	(5)	(6)	(7)	(8)	(9)	(10)	(11)
Method	–	Conv.	Dev.	Conv.	Dev.	Conv.	Dev.	Conv.	Dev.	Conv.	Dev.
Number of iterations	**7**	174	15	187	15	84	16	131	13	104	13
Simulation time (sec.)	0.0973	4.8935	0.3065	4.909	0.3534	2.1809	0.1207	4.1464	0.1356	2.9979	0.3744

Conv.: Conventional method. Dev.: Developed method.

reducing the specified reactive power flow gradually with 0.05 MVAR per step until (23) is achieved where the specified reactive power is reduced to 21.70 MVAR. The required computation time for handling the P_{ex1} violation in this case equals to 2.9979 s.

Case (11): It is similar to case (8), except that P_{ex1}^{max} is enforced using the proposed method by releasing the specified reactive power flow of receiving side according to (61). The modified reactive power flow of sending side that handles the violation P_{ex1} equals **to** 21.7445 MVAR. The required computation time for this case is reduced to 0.3744 s. Hence, P_{ex1}^{max} is enforced more accurately at the required value using the proposed method and need less computation time compared to conventional method (case 10) as illustrated in Table 7.

The number of iterations and simulation time for studied cases considering the operating constraints of C-UPFC using the developed and conventional methods are listed in Table 8. It can be observed that the developed methods need less computational time and number of iterations compared with the conventional method for handling the operating constraints. This due to the saving in times number of load flow solutions.

5. Conclusion

This paper has proposed a comprehensive modelling for Center-node Unified Power Flow Controller into load flow analysis. In this model, the C-UPFC is represented with injected loads as a function of specified control variables. The main advantages of this model are avoiding the modification of Jacobian matrix and reducing the complexities of including C-UPFC into load flow codes. In addition of that, innovative developed methods have proposed for handling operating constraints violation of C-UPFC device. These methods are based on releasing the specified control values of C-UPFC as a function of their maximum limits. The released values are included and updated during the iterative process of load flow algorithm. More accurate operating constraints values have been obtained with less computation time compared with the conventional methods. The numerical results of various studied cases using IEEE 30-bus and IEEE 118-bus test systems demonstrated the feasibility and superiority of proposed C-UPFC model and the operating constraints handling methods.

Acknowledgments

This work was supported in part by the Project Supported by the National Key Research and Development Program of China under grant 2017YFB0902200, National “111” Project of China B08036, the Basic and Frontier Research Project of Chongqing under grant cstc2017jcyjBX0056 and the Academician Lead Science and Technology Innovation Guide Project of Chongqing under grant cstc2017jcyj-yszxX0011.

References

[1] Acha E, Fuerte-Esquivel CR, Ambriz-Perez H, Angeles-Camacho C. FACTS: modelling and simulation in power networks. John Wiley & Sons; 2004.
[2] Zhang X-P, Rehtanz C, Pal B. Flexible AC transmission systems: modelling and control. Springer Science & Business Media; 2012.
[3] Hingorani NG, Gyugyi L, El-Hawary M. Understanding FACTS: concepts and technology of flexible AC transmission systems. Wiley Online Library; 2000.
[4] Ooi BT, Kazerani M, Marceau R, Wolanski Z, Galiana F, McGillis D, et al. Mid-point siting of FACTS devices in transmission lines. IEEE Trans Power Delivery 1997;12:1717–22.
[5] Ooi BT, Lu B. C-UPFC: A new FACTS controller with 4 degrees of freedom. In: Power electronics specialists conference, 2000 PESC 00 2000 IEEE 31st Annual: IEEE; 2000. p. 961–6.
[6] Ajami A, Hosseini SH, Khanmohammadi S, Gharehpetian GB. Modeling and control of C-UPFC for power system transient studies. Simul Model Pract Theory 2006;14:564–76.

[7] Kamel S, Jurado F, Mihalic R. Advanced modeling of center-node unified power flow controller in NR load flow algorithm. Electr Power Syst Res 2015;121:176–82.
[8] Nabavi-Niaki A, Iravani MR. Steady-state and dynamic models of unified power flow controller (UPFC) for power system studies. IEEE Trans Power Syst 1996;11:1937–43.
[9] Nor KM, Mokhlis H, Gani TA. Reusability techniques in load-flow analysis computer program. IEEE Trans Power Syst 2004;19:1754–62.
[10] Bhowmick S, Das B, Kumar N. An indirect UPFC model to enhance reusability of Newton power-flow codes. IEEE Trans Power Delivery 2008;23:2079–88.
[11] Bhowmick S, Das B, Kumar N. An advanced IPFC model to reuse Newton power flow codes. IEEE Trans Power Syst 2009;24:525–32.
[12] Bhowmick S, Das B, Kumar N. An advanced static synchronous compensator model to reuse Newton and decoupled power flow codes. Electr Power Compon Syst 2011;39:1647–66.
[13] Kamel S, Jurado F, Chen Z. Power flow control for transmission networks with implicit modeling of static synchronous series compensator. Int J Electr Power Energy Syst 2015;64:911–20.
[14] Kamel S, Jurado F. Power flow analysis with easy modelling of interline power flow controller. Electr Power Syst Res 2014;108:234–44.
[15] Liu J-Y, Song Y-H, Mehta P. Strategies for handling UPFC constraints in steady-state power flow and voltage control. IEEE Trans Power Syst 2000;15:566–71.
[16] Zhang Y, Chen C. A novel power injection model of IPFC for power flow analysis inclusive of practical constraints. IEEE Trans Power Syst 2006;21:1550–6.
[17] Zhang X-P. Advanced modeling of the multicontrol functional static synchronous series compensator (SSSC) in Newton power flow. IEEE Trans Power Syst 2003;18:1410–6.
[18] Ebeed M, Kamel S, Jurado F. Determination of IPFC operating constraints in power flow analysis. Int J Electr Power Energy Syst 2016;81:299–307.
[19] Kamel S, Jurado F, Chen Z, Abdel-Akher M, Ebeed M. Developed generalised unified power flow controller model in the Newton-Raphson power-flow analysis using combined mismatches method. IET Gener Transm Distrib 2016;10:2177–84.
[20] Ebeed M, Kamel S, Jurado F. Constraints violation handling of GUPFC in Newton-Raphson power flow. Electr Power Compon Syst 2017:1–12.
[21] Ebeed M, Kamel S, Jurado F. Constraints violation handling of SSSC with multi-control modes in Newton-Raphson load flow algorithm. IEEJ Trans Electr Electron Eng 2017.
[22] Data of IEEE test power systems. Available: http://www.ee.washington.edu/research/pstca/.